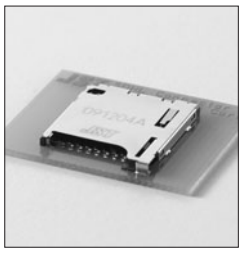

SDHL CONNECTOR

Emboss Tape

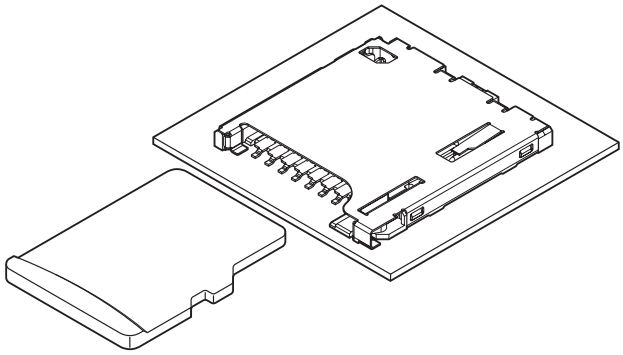

This is the connector for micro-SD card connector in which mounting height of 1.4mm maximum is kept and push-push mechanism is adopted.

Specifications

- Current rating: 0.5A AC, DC
- Voltage rating: 100V AC, DC
- Temperature range: -25˚C to +85˚C (including temperature rise in applying electrical current)
- Contact resistance: Initial value/100m Ω max. After environmental testing/40m Ω max. (variation from initial value)
- Insulation resistance: 1,000M Ω min.
- Withstanding voltage: 500V AC/minute

* Compliant with RoHS.
* Refer to "General Instruction and Notice when using Terminals and Connectors" at the end of this catalog.
* Contact JST for details.

Connector

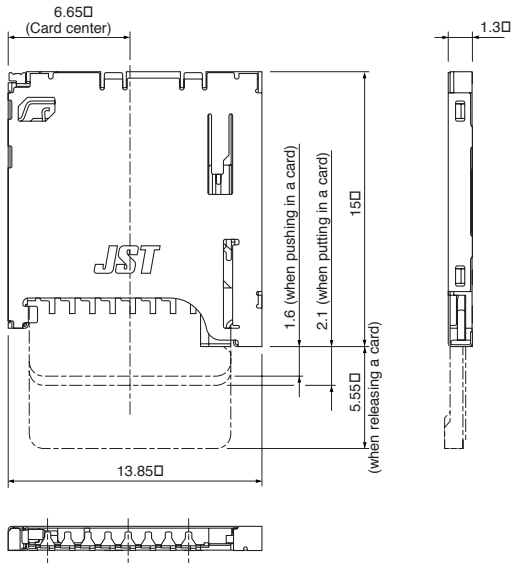

Model No.	Q'ty / reel
SDHL-8BNS-K-363-A0-TB (HF) N	1,500
SDHL-8BNS-K-363-A0-ETB (HF)	1,500

Material and Finish
Contact, Switch: Copper alloy, nickel-undercoated, nickel-palladium alloy-plated Switch for signal: Mating part; gold-plated Solder tail; gold-plated Shell: Stainless, nickel-undercoated, selective gold-plated

RoHS compliance
Note: This products listed above are supplied on embossed-tape.
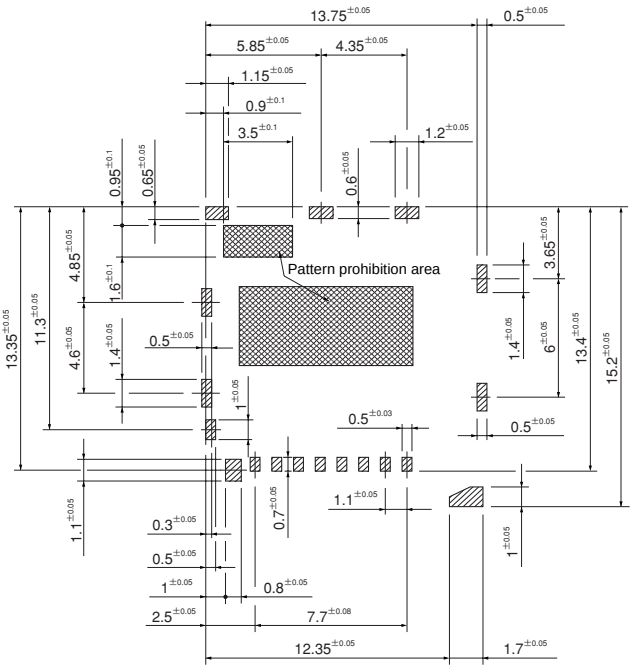
PC board layout