THIS DRAWING IS UNPUBLISHED. RELEASED FOR PUBLICATION 1997
© COPYRIGHT 1997 BY TYCO ELECTRONICS CORPORATION. ALL RIGHTS RESERVED.

LOC	DIST
A1	–

REVISIONS

P	LTR	DESCRIPTION	DATE	DWN	APVD
	A3	Released as per ECR-07-012890	12-06-07	SK	TS
	A4	REVISED PER ECO-09-027197	17DEC09	KK	AEG

PN 1-3

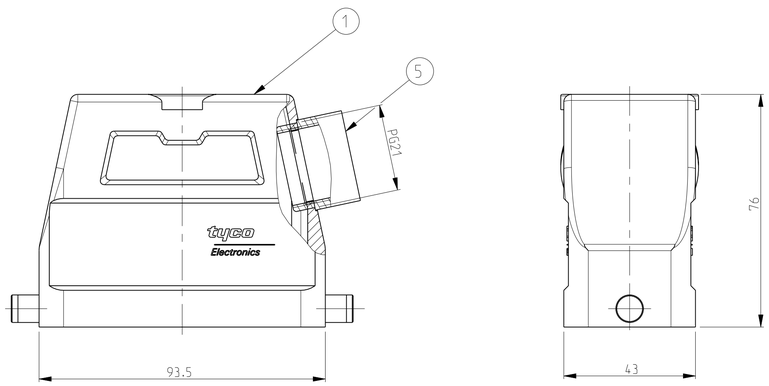

PN 1-6

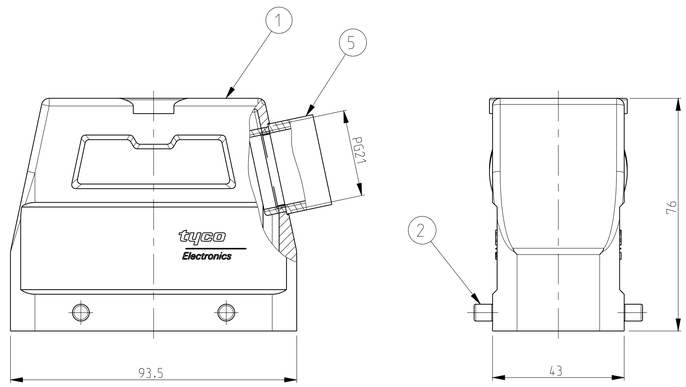

PN 1-7

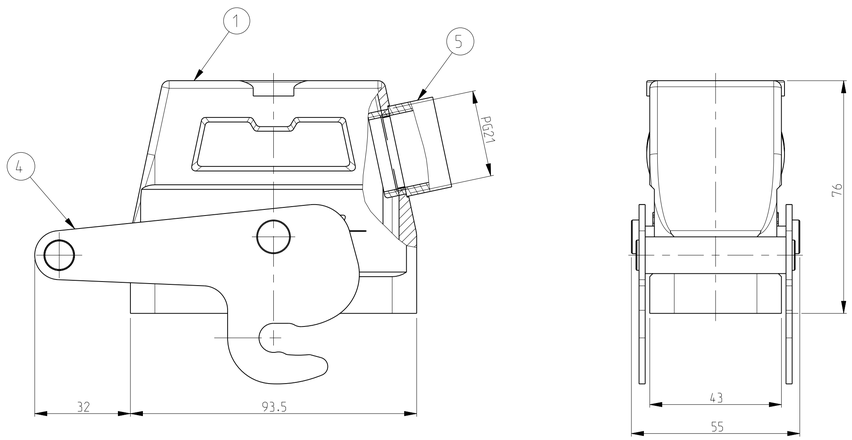

NOTES

1. Material: Housing: aluminium diecasting alloy
   Seals:Neoprene
2. Surface:- varnish- grey
3. Varnish on the inside not necessarily
4. Packaging
   Folding carton PN 0-1243099-1
   Packaging quantity: 5 pieces
5. OBSOLETE PARTS: OBSOLETE CIS STREAMLINING PER D.RENAUD/D.SINISI

PN 1-3

SCALE 1:2

PN 1-6

SCALE 1:2

PN 1-7

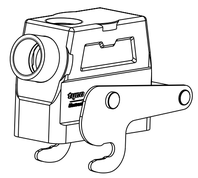

SCALE 1:2

1-3	1-7	1-1	1-6	DESCRIPTION	MATERIAL (1)	SURFACE (2)	COLOR (2)	ITEM NO	NOTES
	OBSOLETE (5)	OBSOLETE							
1	1	1	1	Adaptor Pg21	Brass	Nickel plated	-	5	-
	2			LB-Clip bolt	Steel	Zinc plated	Blue	4	-
		2		VS-Clip	Steel	Zinc plated	Blue	3	-
			4	VS-Clip bolt	Steel	Zinc plated	Blue	2	-
1	1	1	1	Hood HD.40.Pg.1.21	Aluminium	-	Grey	1	-

ORDERING TEXT

HD.40.Sts.1.21.Z

HD.40.Sts-VS.1.21.Z

HD.40.Sts-GR.1.21.Z

HD-Z.40.Sts-ZB.1.21.Z

THIS DRAWING IS A CONTROLLED DOCUMENT FOR TYCO ELECTRONICS CORPORATION. IT IS SUBJECT TO CHANGE AND THE CONTROLLING ENGINEERING ORGANIZATION SHOULD BE CONTACTED FOR THE LATEST REVISION.

DIMENSIONS: mm

TOLERANCES UNLESS OTHERWISE SPECIFIED:
± 0.13 MM
± .005 ZTOL-MM-E
± .005 WKS-120
0 PLC ±
1 PLC ±
2 PLC ±
3 PLC ±
4 PLC ±
ANGLES ±

MATERIAL (1)

FINISH (2)

DWN Schneider 20.08.01
CHK Schnurpfeil 20.08.01
APVD –
PRODUCT SPEC –
APPLICATION SPEC –
WEIGHT –

Tyco Electronics

Tyco Electronics Corporation, AMP GmbH
D-53819, Neunkirchen, Germany

NAME: Hood HD.40.STS.1.21.Z

SIZE	CAGE CODE	DRAWING NO	RESTRICTED TO
A1	00779	C-1102563	–

CUSTOMER DRAWING | SCALE 1:1 | SHEET 1 OF 1 | REV A4